Chapter 1 Getting Started

1.1 Preinstallation

The preinstallation process involves the following activities:

- Selecting a site
- Unpacking components

1.1.1 Selecting a Site

Consider the following when selecting a site for your computer:

- Determine the best site for your system. Cable paths should not run near equipment that might cause electromagnetic or radio frequency interference such as radio transmitters, television sets, copy machines, or heating and air conditioning equipment.
- Route cables away from personnel and equipment traffic.
- Avoid dusty areas and extremes of temperature and humidity.

1.1.2 Unpacking Components

Unpack the contents of each box carefully. Save all packing materials in case you need to move or ship the system in the future.

Check that all items are present and in good condition. Contact your dealer immediately if anything is missing or damaged.

1.2 Features

The basic configuration consists of a system unit, a monitor, a keyboard, a CD-ROM drive, a diskette drive, a fixed disk drive and a mouse.

1.2.1 Front Panel

Figure 1-1 shows the system unit front panel.

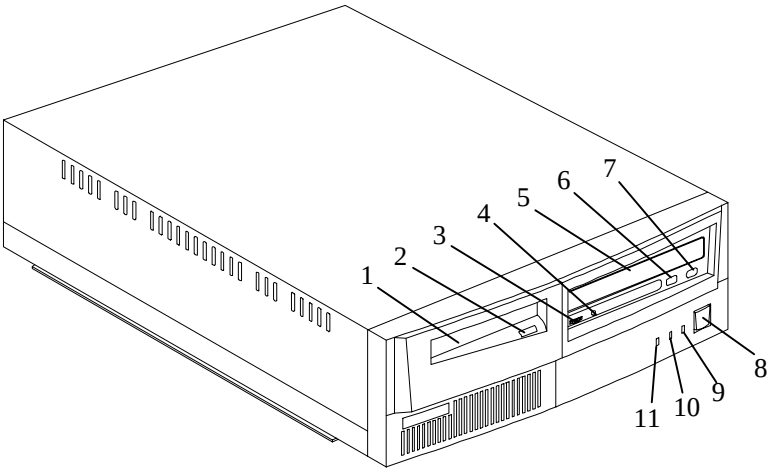

1. *3.5-inch floppy disk drive*
2. *3.5-inch diskette drive eject button*
3. *Volume control*
4. *Headphone/Earphone Port*
5. *CD-ROM drive*
6. *Stop/Eject Button*
6. *Stop/Eject Button*
7. *Skip/Forward Button*
8. *Power button*
9. *Power/suspend indicator*
10. *Network active indicator*
11 *Hard disk/message indicator*

Figure 1-1 Front Panel

1.2.2 Rear Panel

Figure 1-2 shows the system unit rear panel.

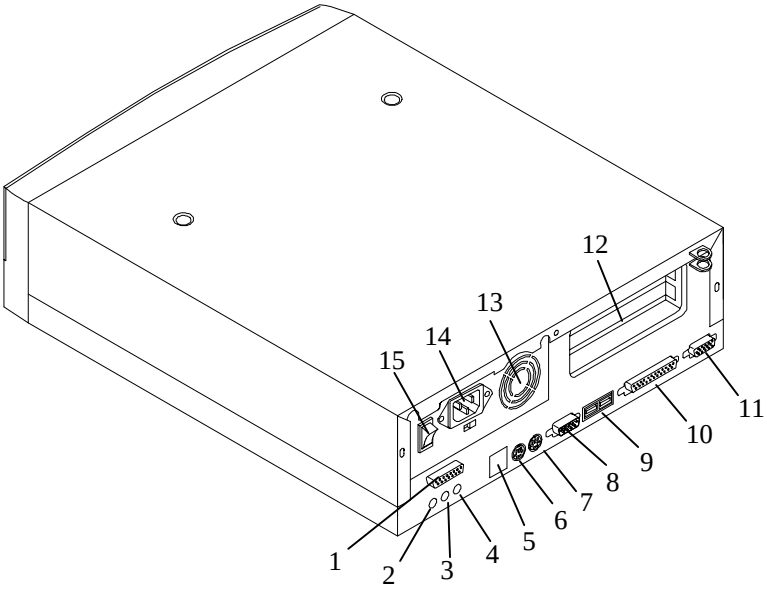

1. *Game/MIDI port*
2. *Microphone-in port*
3. *Line-in port*
4. *Line-out port*
5. *Network port*
6. *PS/2 keyboard port*
7. *PS/2 mouse Port*
8. *Serial port*
9. *USB Ports*
10. *Parallel port*
11. *Monitor/VGA Port*
12. *Add-on card brackets*
13. *Fan*
14. *System power socket*
15. *Power Switch*

Figure 1-2 Rear Panel

1.3 Connecting System Components

Do not turn on the power until you finish connecting the system components.

The following sections show how to connect each component to the system.

1.3.1 Connecting the Keyboard

Plug the keyboard cable into the keyboard socket on the rear panel. See Figure 1-3.

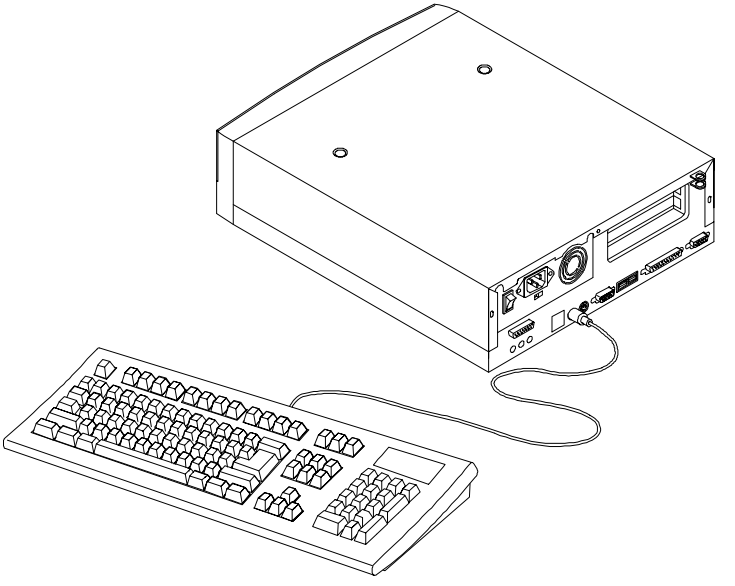

Figure 1-3 Connecting the Keyboard

1.3.2 Connecting the Monitor

Plug the monitor signal cable into the VGA connector on the rear panel.

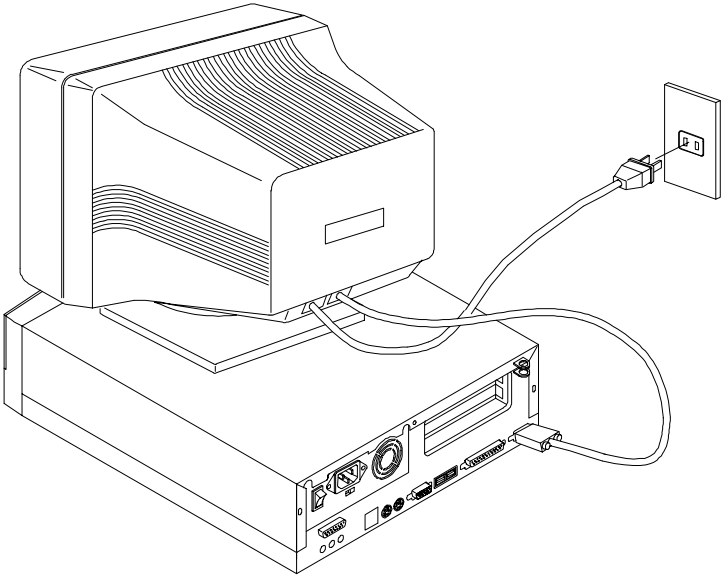

Figure 1-4 Connecting the Monitor

1.3.3 Connecting the Mouse

Plug the mouse cable into the mouse connector on the rear panel.

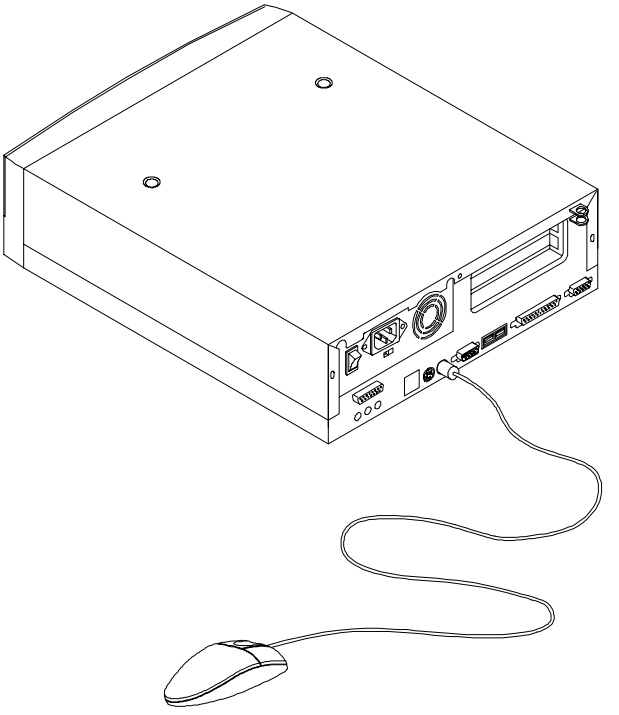

Figure 1-5 Connecting the Mouse

1.3.4 Connecting the Printer (Optional)

If you have a parallel printer, connect it to the parallel port on the rear panel. See Figure 1-6.

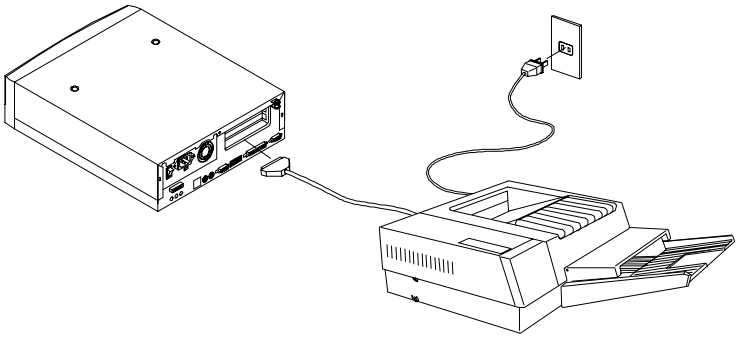

Figure 1-6 Connecting the Parallel Printer

If you have a serial printer or other serial peripheral, connect it to the serial port (COM1).

1.3.5 Complete System Connections

After connecting all the components, plug one end of the power supply cable into the system power socket. Plug the other end of the power supply cable into a wall outlet. Figure 1-7 shows the complete system connections.

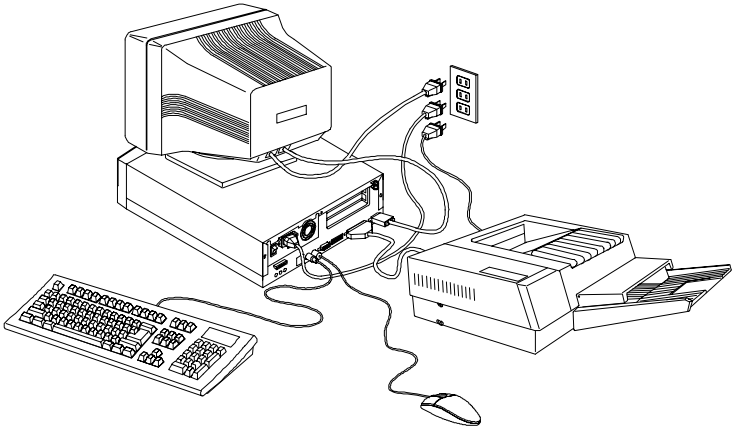

Figure 1-7 Complete System Connections

1.3.6 Connecting Multimedia Components (Optional)

Your system also supports optional multimedia features. Connect multimedia components as shown in Figure 1-8.

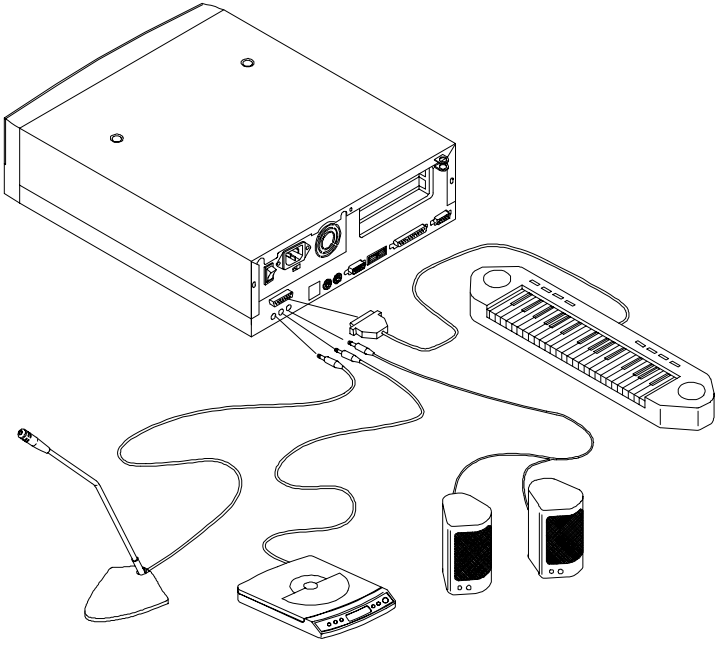

Figure 1-8 Connecting Multimedia Components

1.3.7 Connecting to the Network

You can connect your system to the network via the onboard RJ45 port.

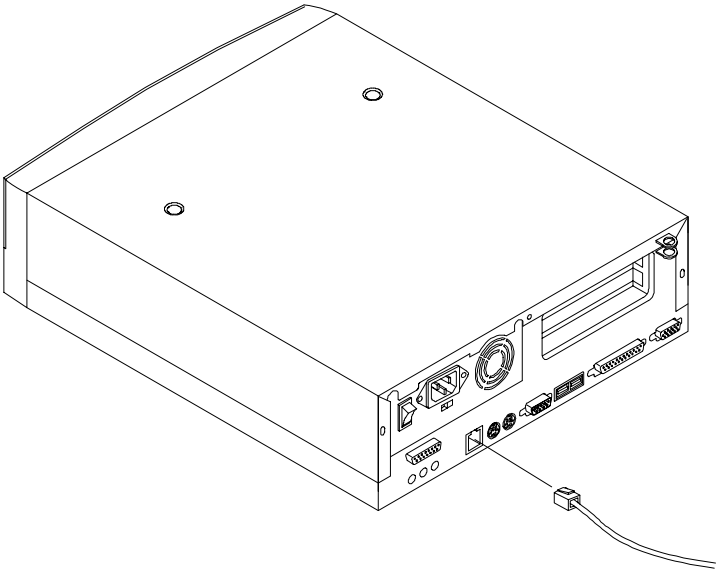

Figure 1-9 Connecting to the Network

1.3.8 Connecting the Fax/Modem (Optional)

Your system also supports the optional fax/modem feature. Connect the telephone line and handset as shown in Figure 1-10.

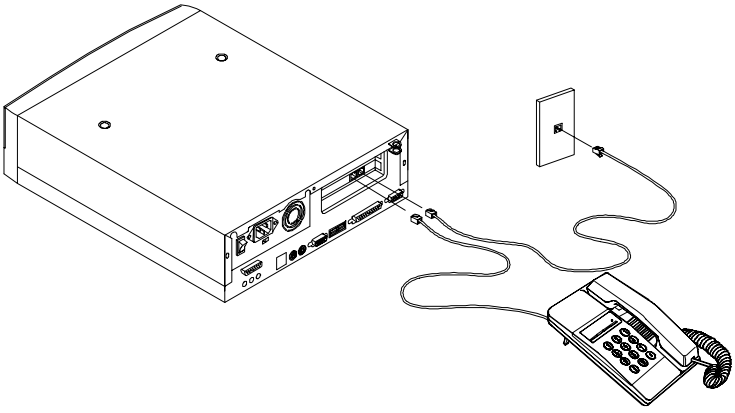

Figure 1-10 Connecting the Telephone Line and Handset to the Fax/Modem

1.3.9 Connecting USB Devices (Optional)

The USB ports on the rear panel enable the system to support additional serial devices without using up your system resources.
To connect a USB device, simply plug the device cable into a USB port marked on the rear panel. See the following figure:

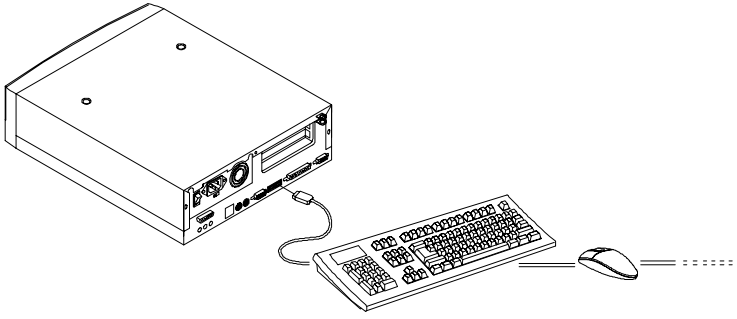

Figure 1-11 Connecting USB Devices

Most USB devices have a built-in USB port which allows you to daisy-chain other devices.

1.4 Turning On Your Computer

After you have connected all peripherals and cables, follow these steps to turn on your computer:

1. Turn on all peripherals connected to the system such as the monitor, printer, fax, speakers, etc.

2. Press the power button located on the front of the system unit.

When the system finishes booting, the computer is ready for use.

1.5 Turning Off Your Computer

1. Turn off all peripherals connected to the system such as the monitor, printer, fax, speakers, etc.

2. Press the power button located on the front of the system unit for at least four seconds. Quickly pressing the button puts the system in Suspend mode only.

3. Unplug the system if you are going to do any of the following:

   - not use the system for a long period of time
   - open the system
   - install system component(s)

Opening and installing components without unplugging the system may result in serious damage both to the system and the component. Unplugging the system ensures that there is no standby current on the system board. Not doing so may damage your system.

1.6 Troubleshooting

If you encounter a hardware problem, review the following suggestions before calling for service.

General Failure

- Are all cables securely plugged in?
- Are all system components and peripherals turned on?
- Is the system main power switch on?
- Is the power outlet burned out? You may check this by plugging in and turning on some other piece of equipment.
- Are any cables damaged? Are they properly routed and coiled? Entwined cables may cause signal interference.

Front Panel Light Doesn't Work

- Check inside the system unit and make sure that the front panel LED connector is correctly plugged in (refer to section 2.3 Jumpers and Connectors).

"Garbage" or Nothing Appears on the Screen

- Is the monitor turned on? Is the screen brightness adjusted properly?

Never open the monitor case. The CRT monitor retains very high voltage levels, even after the power is turned off. Refer all monitor service to qualified service technicians.

Keyboard is Dead

- Is the keyboard cable plugged in? Turn off the system unit and plug in the keyboard.

Do not plug or unplug the keyboard while the power is on.

Printer Doesn't Work

- Is the printer power turned on?
- Is the printer cable connected to the correct port (serial or parallel)? Is the pin signal interface correct?
- Are your application and the printer configured for the same operating values? Be sure there is no conflict with any port and add-on card.
- Is the printer out of paper or jammed? Check the printer's status indicator lights.
- Are the printer cables tangled? To prevent signal interference, neatly fold or coil excess cable length.

Add-on Card Fails Intermittently

- Do two add-on cards have conflicting addresses?

If You Receive an Error Message

- Read the corrective actions in Table 1-1 in section 1.7.

1.7 Error Messages

In the event that you receive an error message, do not continue using the computer. Note the message and take corrective action immediately. This section describes the different types of error messages and suggests corrective measures.

There are two general types of error messages:

- Software
- System

1.7.1 Software Error Messages

Software error messages are returned by your operating system or application. These messages typically appear after you boot the operating system or when you run your applications. If you receive this type of message, consult your application or operating system manual for help.

1.7.2 System Error Messages

A system error message indicates a problem with the computer itself. These messages normally appear during the power-on self-test, before the operating system prompt appears. Table 1-1 lists the system error messages.

Table 1-1 System Error Messages

Error Message	Corrective Action
Bad CMOS Battery	Replace battery. Contact your dealer.
CMOS Checksum Error	Run Setup. See Chapter 3.
Floppy Drive Controller Error	Check and connect the cable to the floppy drive or controller.
Floppy Drive Error	Floppy may be bad. If not, check the floppy drive and replace if necessary.
DRAM Configuration Error	Check and modify DRAM configuration to agree with Table 4-1.
Equipment Configuration Error	Run Setup. See Chapter 3.
Hard Disk Controller Error	Check and connect the cable to the hard disk drive or controller.
Hard Disk 0 (1, 2, 3) Auto Detection Failed	Replace the hard disk drive controller. Check the HDD cable connections and CMOS setup configuration.
I/O Parity Error	Contact your dealer.
PS/2 Keyboard Error or No Keyboard Connected	Check and connect the keyboard to the system unit.
PS/2 Keyboard Interface Error	Contact your dealer.
Memory Error	Check DIMMs on the system board. Contact your dealer.
Memory Size Mismatch	Run Setup. See Chapter 3.

Table 1-1 System Error Messages (continued)

Error Message	Corrective Action
Onboard Serial 1 Conflict	Run Setup and disable Onboard Serial 1. See Chapter 3.
Onboard Serial 2 Conflict	Run Setup and disable Onboard Serial 2. See Chapter 3.
Onboard Parallel Port Conflict	Run Setup and disable Onboard Parallel Port. See Chapter 3.
PS/2 Pointing Device Error	Check or connect the pointing device. Contact your dealer.
PS/2 Pointing Device Interface Error	Contact your dealer.
Press F1 key to continue or Ctrl-Alt-Esc for Setup	Press F1 or CTRL ALT ESC.
Press Esc to turn off NMI, any key to reboot	Press ESC to disregard NMI error. Press any key to reboot the system.
Protected Mode Test Fail	Contact your dealer.
RAM BIOS Error	Contact your dealer.
Real Time Clock Error	Run Setup. See Chapter 3.
Shadow RAM Fail	Contact your dealer.
System Memory Address Error	Check DIMMs on system board or contact your dealer.

1.7.3 Correcting Error Conditions

As a general rule, the "Press F1 to continue" error message is caused by a configuration problem which can be easily corrected. An equipment malfunction is more likely to cause a fatal error, i.e., an error that causes complete system failure.

Here are some corrective measures for error conditions:

1. Run Setup. You must know the correct configuration values for your system before you enter Setup, which is why you should write these values down when the system is correctly configured. An incorrect Setup configuration is a major cause of power-on error messages, especially for a new system.

2. Remove the system cover according to the directions in the system housing installation guide. Check that the system board and any expansion boards are set correctly.

3. Check that all connectors and boards are secure. Consult the system housing installation guide for assistance.

If you have purchased a new hard disk drive and cannot access it, it may be because your disk is not physically formatted. Physically format the disk using the FDISK and FORMAT commands.

If you follow the corrective steps above and still receive an error message, the cause may be an equipment malfunction.

If you are sure that your configuration values are correct and your battery is in good condition, the problem may lie in a damaged or defective chip. Contact an authorized service center for assistance.