Notice to End Users

This User's Guide & Technical Reference is for assisting system manufacturers and end users in setting up and installing the mainboard.

Every effort has been made to ensure that the information in this manual is accurate. Soltek Computer Inc. is not responsible for printing or clerical errors. **Information in this document is subject to change without notice and does not represent a commitment on the part of Soltek Computer Inc.**

Companies and products mentioned in this manual are for identification purposes only. Product names appearing in this manual may or may not be registered trademarks or copyrights of their respective companies.

SOLTEK COMPUTER INC. PROVIDES THIS MANUAL "AS IS" WITHOUT WARRANTY OF ANY KIND, EITHER EXPRESS OR IMPLIED, INCLUDING BUT NOT LIMITED TO THE IMPLIED WARRANTIES OR CONDITIONS OF MERCHANTABILITY OR FITNESS FOR A PARTICULAR PURPOSE. IN NO EVENT SHALL SOLTEK COMPUTER INC. BE LIABLE FOR ANY LOSS OR PROFITS, LOSS OF BUSINESS, LOSS OF USE OR DATA, INTERRUPTION OF BUSINESS, OR FOR INDIRECT, SPECIAL, INCIDENTAL, OR CONSEQUENTIAL DAMAGES OF ANY KIND, EVEN IF SOLTEK COMPUTER INC. HAS BEEN ADVISED OF THE POSSIBILITY OF SUCH DAMAGES ARISING FROM ANY DEFECT OR ERROR IN THIS MANUAL OR PRODUCT.

Web site: http://www.soltek.com.tw
email: support@soltek.com.tw

Edition: June 1999
Version: 2.0
SL-56F5/56F1 SERIALS

Contents

Chapter 1
Introduction

Features

CPU

1. Supports Intel Pentium P54C/MMX (P55C) CPUs at 133 ~ 233 MHz;
2. Supports Cyrix/IBM 6x86(L) CPUs at PR133+ ~ PR250+MHz and 6x86MX/MII CPUs at PR166+ ~ PR350+ MHz;
3. Supports AMD K6-2: 250 ~ 450Mhz and K6-III cpus.
4. Supports IDT C6/C6-2: 200 ~ 266MHz;
5. Provides SOCKET 7 ZIF Socket;
6. **Supports 66/75/83/95/100/105/115 MHz CPU clock**
7. Supports CPU voltage auto detect and switching circuit

Chipset

1. VIA VT8501 Apollo MVP4 chipset
2. PCI Rev 2.2, 5V, 33MHz interface compliant
3. AGP V2.0 compliant for 66(1X)/133(2X)MHz transfer modes
4. Onboard built-in AC97 Digital Controller
5. Onboard built-in VGA controller (share system memory)

L2 Cache

1. Onboard supports 512K(for 56F5) / 1MB(for 56F1) write back cache with Pipelined Burst SRAMs

Main Memory

1. Memory range from 8MB (minimum) to 768MB(SDRAM) (maximum) with DRAM Table Free configurations
2. Up to 256MB/Row support 16Mb, 64Mb, 128Mb, 256Mb SDRAM technology
3. Supports SDRAM with 12/10/8ns speed
4. Supports 3 pcs 168pin DIMM sockets (3.3V Unbuffered and 4 clock type)

BIOS

1. AWARD Plug and Play BIOS
2. Support APM V1.2 and ACPI V1.0 spec
3. Flash Memory for easy upgrade

Super I/O Function

1. Integrated USB V1.1 and Intel Universal HCI V1.1 controller with three USB ports. Provide **3 USB connectors**.
2. Supports 2 IDE channels with 4IDE devices (including ZIP/LS-120 devices)
3. **Provides PCI IDE Bus Master function and supports Ultra DMA33/66 function**
4. One floppy port
5. Two high speed 16550 FIFO UART ports
6. One parallel port with EPP/ECP/SPP capabilities
7. Support Legacy keyboard and PS/2 mouse connector
8. Built-in RTC, CMOS, keyboard controller on single I/O chip
9. Peripherals boot function (with ATX power)

Onboard built-in AC97 Digital Audio Controller

1.Integrated sound controller compatible with Sound Blaster Pro™ for Windows DOS box and real-mode DOS legacy compatibility
2.Standard V1.0 or V2.0 AC97 Codec interface
3.Plug and Play with 4 IRQ, 4DMA and 4 I/O space options for
4.SoundBlaster Pro and MIDI hardware
5.Hardware assisted FM synthesis for legacy compatibility

Onboard built-in VGA Controller

1.Supports 2 to 8 MB of frame buffer located in system memory
2.Real time DVD MPEG-2 and AC-3 playback Video processor
3.Integrated 24-bits 230MHz true color DAC
4.Extended screen resolutions up to 1600 * 1200
5.DirectX6 and OpenGL ICD API

Other Functions

1.ATX size 19cm x 32cm
2.3 PCI Master slots, 2 ISA slots, 1 AMR(Audio Modem Riser) Slot .
3.Supports SCSI/CD-ROM Boot function
4.Supports jumperless setting
5.Supports 66/75/83//95/100/105/112MHz Bus Clock(from BIOS)
6.Supports Wake On Lan (WOL) function. **
7.Onboard built-in hardware monitor feature.

: For support WOL, the ATX power supply has to have at least 5V/720mA standby current.

Mainboard Layout with Default Settings

The default settings of the following figure is for the AMD K6-2 350/100MHz:

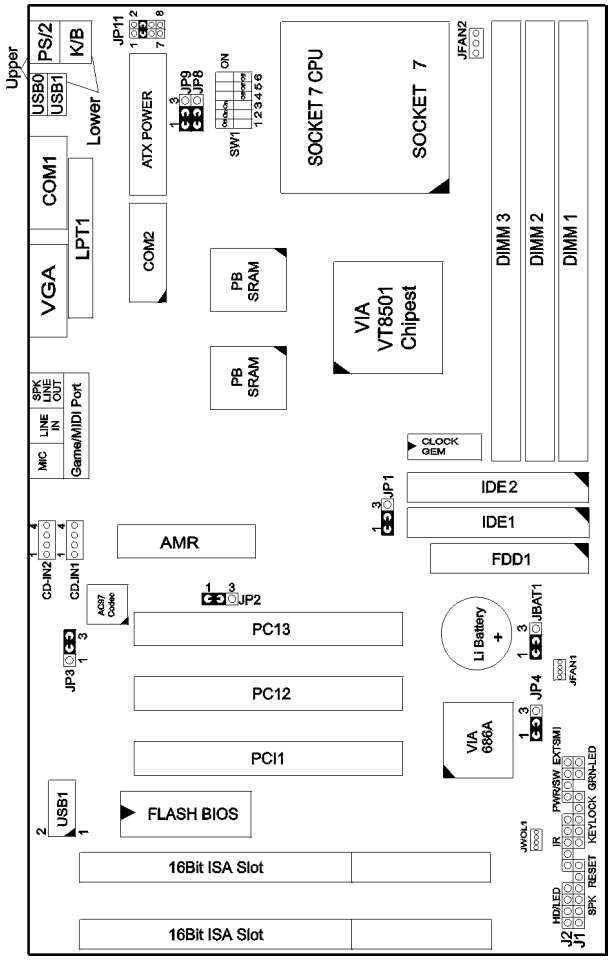

Figure 1-1. Motherboard Layout

Chapter 2
Hardware Setup

CPU Vcore Voltage Setting

JP11: CPU Vcore Voltage Setting

V_{Core} Voltage	JP11	V_{Core} Voltage	JP11	V_{Core} Voltage	JP11	V_{Core} Voltage	JP11
2.0V	1 2 / 7 8	2.4V K6-2/450 K6-3	1 2 / 7 8	2.8V MMX, 6x86L	1 2 / 7 8	3.2V K6Ð233	1 2 / 7 8
2.1V	1 2 / 7 8	2.5V	1 2 / 7 8	2.9V K6 166/200 6x86MX (MII)	1 2 / 7 8	3.3V IDT C6	1 2 / 7 8
2.2V K6-266 (or higher) K6-2	1 2 / 7 8	2.6V	1 2 / 7 8	3.0V	1 2 / 7 8	3.4V	1 2 / 7 8
2.3V	1 2 / 7 8	2.7V	1 2 / 7 8	3.1V	1 2 / 7 8	3.5V Pentium (P54C) 6x86 K5	1 2 / 7 8

AMD K6-III 400/450 CPUs
AMD K6-2 300/333/350/380/400/450 CPUs

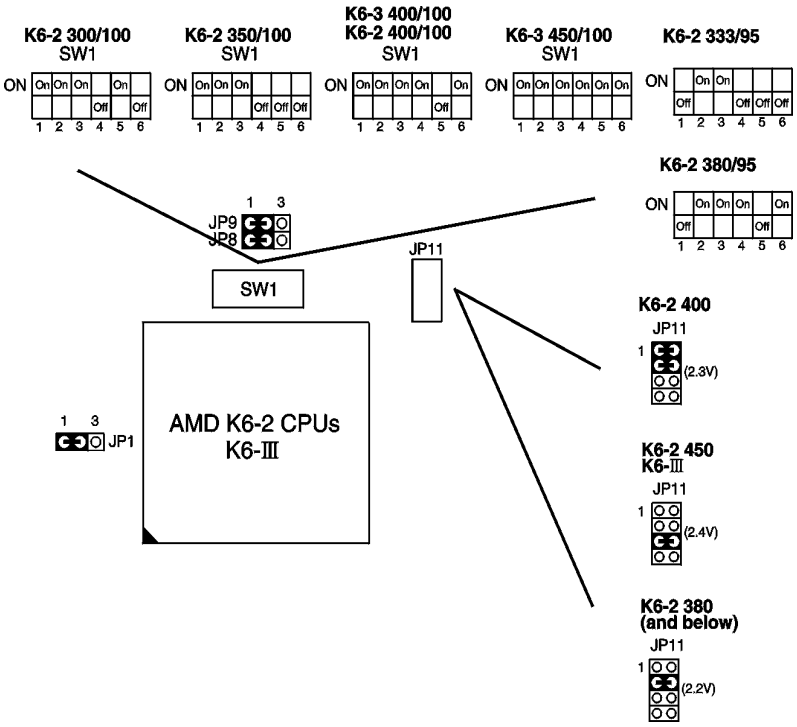

Figure 2-1 AMD K6-2 / K6-III CPUs Type Configuration

Cyrix / IBM 6x86MX, MII CPUs Setting

Cyrix / IBM 6x86MX-PR-200/233/266 CPUs
Cyrix /IBM MII-300/333/350 CPUs

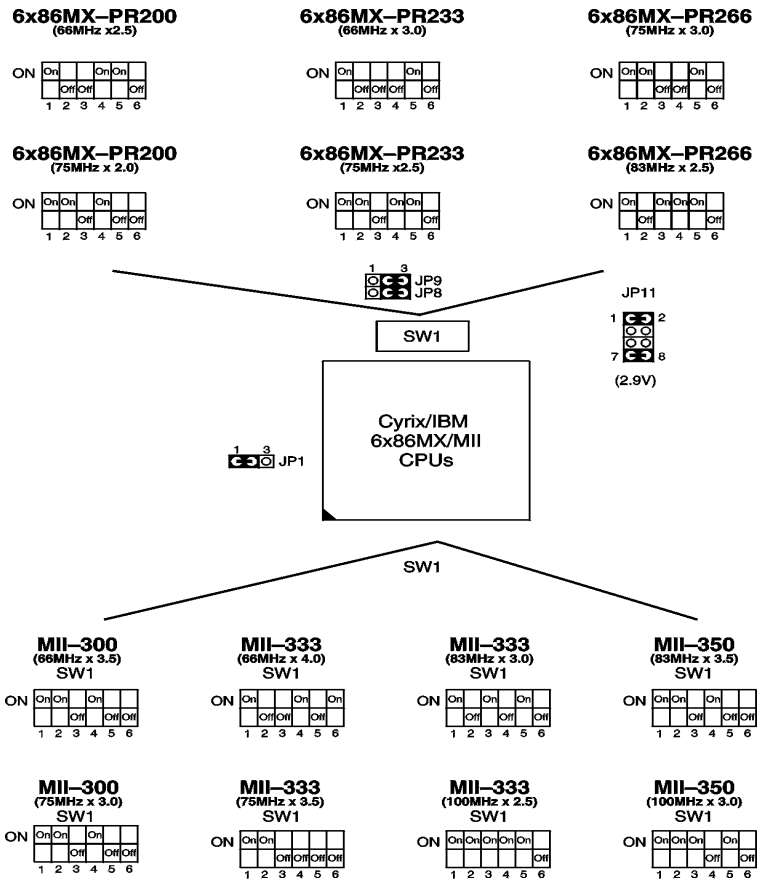

Figure 2-2 Cyrix 6x86 / MII CPUs Type Configuration

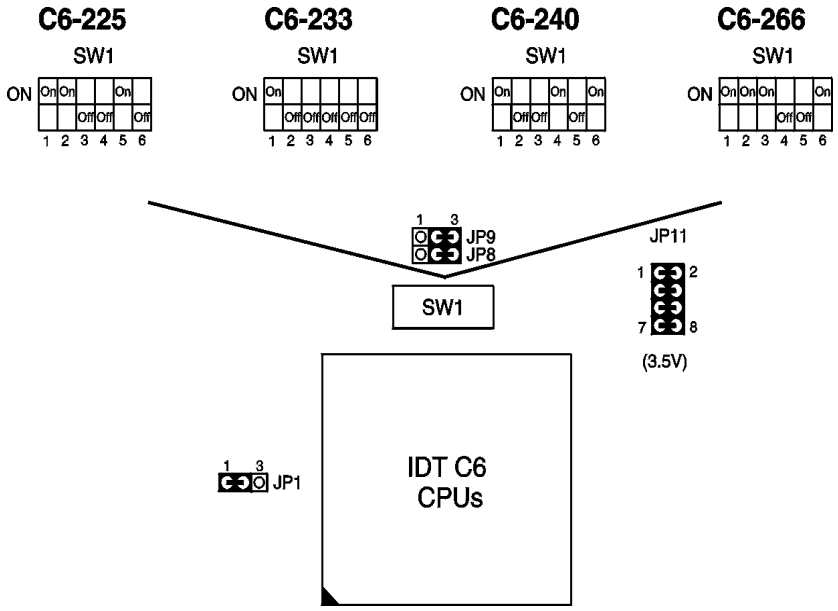

Figure 2-3 IDT C6 CPUs Type Configuration

INTEL Pentium / AMD K5 CPUs Setting

Pentium /K5 –133/166/200 CPUs

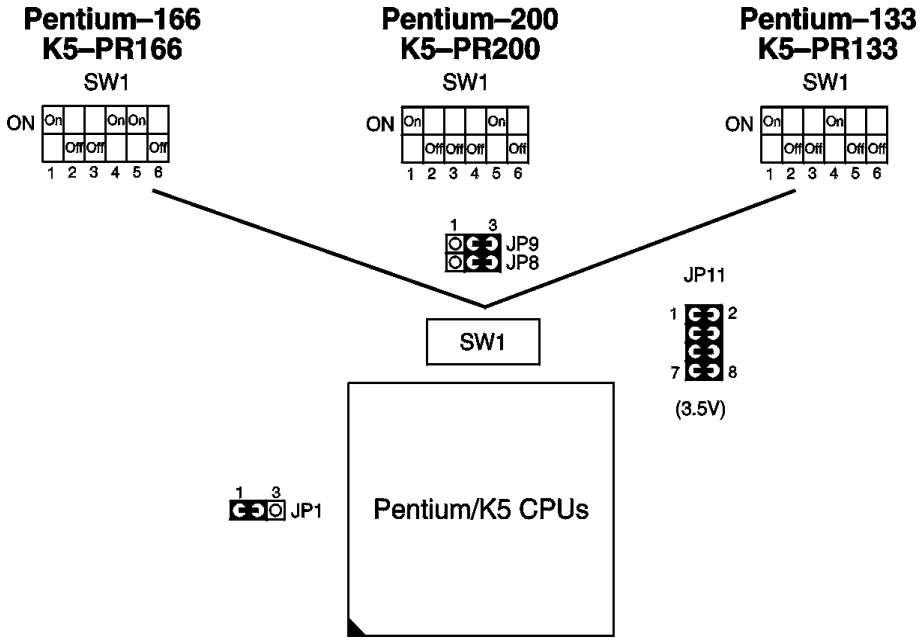

Figure 2-4 Pentium / K5 CPU Type Configuration

System Memory Configuration

This VIA MVP4 mainboard supports 168 pin DIMM of, 16Mb, 64Mb, 128Mb and 256Mb to form a memory size between 8MB to 768GB(SDRAM). MVP4 chipsets provide "Table- Free" function, but do remember that the DRAM must be 3.3V Unbuffered and 4 clock type.**User can use any DIMMs slot without any limit**

JFAN 1~2: Onboard FAN (12V) Connector

FAN#	Function
JFAN1	System FAN
JFAN2	CPU FAN

SW1: 1-3: CPU Clock Select
SW1: 4-6: Bus Ratio Select

SW1: 4~6	1.5x or 3.5x	2.0x	2.5x	3.0x
CPU Bus Ratio Setting	ON On Off Off Off 4 5 6	ON On Off Off 4 5 6	ON On On Off 4 5 6	ON On Off Off 4 5 6
SW1: 4~6	4.0x	4.5x	5.0x	5.5x
CPU Bus Ratio Setting	ON On On Off 4 5 6	ON On On On 4 5 6	ON On On Off 4 5 6	ON On Off Off 4 5 6

SW1: 1~3	66MHz	75MHz	83MHz	95MHz
CPU Clock Setting	ON On Off Off 1 2 3	ON On On Off 1 2 3	ON On On Off 1 2 3	ON On On Off 1 2 3
	100MHz	105MHz	115MHz	60MHz
	ON On On On 1 2 3	ON On On Off 1 2 3	ON On On Off 1 2 3	ON Off Off Off 1 2 3

Onboard VGA Chip Enabled/Disabled

See “Frame Buffer Size” option in the BIOS “Chipset Feature Setup”.

JBAT1: Clear CMOS Data

Clear the CMOS memory by shorting this jumper momentarily; then remove the cap to retain new settings.

CMOS Data	JBAT1
Retain Data (default)	
Clear Data	

JP2/JP3: Onboard AC97 Sound Chip Enabled/Disabled

This jumper allows user to control onboard sound chip Function.

Sound Chip	JP2 JP3
Enabled (default)	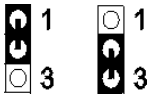
Disabled	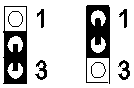

JP4: Power Lost Resume

This jumper allows you to use the switch of ATX power supply to control on/off switch directly instead of using the power switch on the mainboard.

Power Lost Resume	JP4
Enabled	
Normal(default)	

This feature must work with BIOS. Please refer to the " Power On After PWR-Fail "section on page 29 for description.

JP1: CPU Clock Select

This jumper must be selected with SW1 1-3.

CPU Clock	JP1
Under or Equal to 100 MHz	
Over 100 MHz	

JP8/JP9: CPU Dual/Single Voltage Select

	JP8/JP9	CPU Type
Single Voltage		Pentium P54C, K5, 6x86, IDT
Dual Voltage		MMX, K6/K6-2/K6 III 6x86L/6x86MX, MII

Sound Connectors:

CD_IN1,CD_IN2: CD-ROM Audio Connector
Connect CD_IN1, CD_IN2 to the CD-ROM Audio Connector.

Game/MIDI port
Connect the joystick or MIDI to this connector.

Mic:Microphone Jack

Line in: Audio in Jack

Line Out/Speaker Out: Audio Out Jack

IDE LED Activity Light: (J2 pin1-4)
This connector connects to the hard disk activity indicator light on the case.

Infrared Port Module Connector (J2 pin6-10)

The system board provides a 5-pin infrared connector-R1 for an optional wireless transmitting and receiving module. Pin 6 through 10 are Transmit, GND, Receive (low speed), Receive (high speed), and Vcc, respectively.

J2 pin12, 13: PWR Switch

Power Switch: Toggle this pin for turning on/off of the Power supply (for ATX power only).

SLEEP Switch (J2 pin14, 15)

Toggle this jumper forces the system to sleep and the system won't wake up until the hardware event is coming. (The BIOS Power Management setting must be Enabled.)

Speaker Connector (J1 pin1-4)

The speaker connector is a 4-pin connector for connecting the system and the speaker. (See the following drawing for jumper position.)

Reset Switch (J1 pin5, 6)

The system board has a 2-pin connector for rebooting your computer without having to turn off your power switch. This prolongs the life of the system's power supply.

JWOL1: Wake On Lan (WOL) Connector

This connector is designed to use Lan to bootup the system. Connect the wake on signal from Lan card to this connector.

Power LED and Keylock Switch (J1 pin8-12)

The keylock switch is a 5-pin connector for locking the keyboard for security purposes. (See the following drawing for jumper position, and pin1~3 is connected to power LED and pin 4~5 is connected to keylock switch.)

Turbo LED (J1 pin14, 15)

Connect the case's turbo LED to this connector.

Onboard AC97 Audio Codec Driver Installation

For Win95/98:

1. Enter Control Panel ->Device Manager -> Sound,video and game controller -> VIA AC97 PCI AUDIO Device [WDM Driver]
2. Press Mouse right button (or double click this item).
3. Select "Update Driver" and change the directory to CD\Driver\Audio\VIA AC97\Win9X\VIAUDIO.INF (Win9X depend on user's O.S.: Win95 or Win98).
4. Reboot the system.

For NT4.0:

1. Enter Control Panel ->Multimedia ->Device ->Add ->select "Unlist or Updated Driver"
2. Change the directory to CD:\Driver\Audio\VIA\AC97\WINNT40\OEMSETUP.INF
3. Reboot the system.

NOTE:

If user want to use external sound card, then user must "disabled" "OnChip Sound" option in the BIOS "CHIPSET FEATURE SETUP".

Onboard VGA Driver Installation

For Win95/98, NT4.0:

1. Enter Control Panel ->Device Manager -> Display adapters
2. Press Mouse right button (or double click this item).
   Select "Change…" and there will appear a window asks you to continue, press "Next".
3. Then select "Display a list of drivers in a specific location, so you can select the driver you want." dialog box and press "Next".
4. Press "Have Disk" and press "Next".
5. Press "Browse…", change the directory to CD-ROM location, if the CD-ROM is D, change to ***D:\Driver\MVP4\VGA\Win9x\Trident.inf*** and press "OK".
6. Select ***"Trident 8400 PCI/AGP(v6.50.5474)"***, and press "OK".
7. Press "Yes" and finish the process.

J2 Switch Signal Summary

J2	Pin	Signal Description
HDD LED Connector	1	+5V
	2	HDD LED Signal
	3	HDD LED Signal
	4	+5V
N.C.	5	No Connection
Infrared Connector	6	Infrared Transmit Signal
	7	GND
	8	Infrared Receive Signal (low speed)
	9	Infrared Receive Signal (high speed)
	10	+5V
N.C.	11	No Connection
PWR	12	CND
	13	Power Switch(for ATX Power)
SLEEP	14	GND
	15	Sleep Signal

J1 Switch Signal Summary

J1	Pin	Signal Description
Speaker Connector	1	Speaker Signal
	2	No Connection
	3	Ground
	4	+5V
Reset Switch	5	Reset Signal
	6	Ground
N.C.	7	No Connection
Power LED Connector	8	+5V
	9	No Connection
	10	Ground
Keylock Connector	11	Keylock Signal
	12	GND
N.C.	13	No Connection
Turbo LED Connector	14	Turbo LED Connector
	15	Ground

Chapter 3
Award BIOS Setup

This 693 Apollo Pro-Plus motherboard comes with the AWARD BIOS from AWARD Software Inc. Enter the Award BIOS program Main Menu by:

1. Turn on or reboot the system.
After a series of diagnostic checks, the following message will appear:

PRESS <DEL> TO ENTER SETUP

2. Press the <DEL> key and the main program screen will appear as follows.

```
                    ROM PCI/ISA BIOS(2A5LHSN9)
                        CMOS SETUP UTILITY
                      AWARD SOFTWARE, INC.
```

STANDARD CMOS SETUP	CPU SPEED SETTING
BIOS FEATURES SETUP	INTEGRATED PERIPHERALS
CHIPSET FEATURES SETUP	SUPERVISOR PASSWORD
POWER MANAGEMENT SETUP	USER PASSWORD
PNP/PCI CONFIGURATION	IDE HDD AUTO DETECTION
LOAD SETUP DEFAULTS	SAVE & EXIT SETUP
	EXIT WITHOUT SAVING
Esc : Quit	↑ ↓ → ← :Select Item
F10 : Save & Exit Setup	(Shift) F2 : Change Color
Time, Date,Hard Disk Type...	

3. Using the arrows on your keyboard, select an option, and press <Enter>. Modify the system parameters to reflect the options installed in your system.
4. You may return to the Main Menu anytime by pressing <ESC> .
5. In the Main Menu, “SAVE AND EXIT SETUP” saves your changes and reboots the system, and “EXIT WITHOUT SAVING” ignores your changes and exits the program.

Standard CMOS Setup

Standard CMOS Setup allows you to record some basic system hardware configuration and set the system clock and error handling. You only need to modify the configuration values of this option when you change your system hardware configuration or the configuration stored in the CMOS memory gets lost or damaged.

Run the Standard CMOS Setup as follows:
1. Choose “STANDARD CMOS SETUP” from the Main Menu and a screen with a list of options will appear.

```
                    ROM PCI/ISA BIOS
                  STANDARD CMOS SETUP
                 AWARD SOFTWARE, INC.
Date (mm:dd:yy) : Thu, May 9 1996
Time (hh:mm:ss) : 15 : 45 : 10

HARD DISKS        TYPE     SIZE  CYLS HEAD PRECOMP LANDZ SECTOR MODE
Rimary Master     : Auto     0     0    0     0     0      0  Auto
Primary Slave     : Auto     0     0    0     0     0      0  Auto
Secondary Master  : Auto     0     0    0     0     0      0  Auto
Secondary Slave   : Auto     0     0    0     0     0      0  Auto

Drive A: 1.44M, 3.5 in.
Drive B: None                          Base Memory:     640K
                                   Extended  Memory:   15360K
                                       Other Memory:     384K
Video : EGA/VGA                         Total Memory: 16384K
Halt On : All Errors
Esc : Quit          ↑ ↓ → ←   :Select Item      PU/PD/+/- : Modify
F1  : Help           (Shift) F2 : Change Color
```

2. Use one of the arrow keys to move between options and modify the selected options by using PgUp/PgDn/+/— keys.

A short description of the screen options is as follows:

Date (mm:dd:yy) **Time (hh:mm:ss)**	Set the current date and time.
Primary (Secondary) Master/Slave	This field records the specifications for all non-SCSI hard disk drives installed in your system. Refer to the respective documentation on how to install the drives.
Drive A/B	Set this field to the type(s) of floppy disk drive(s) installed in your system. The choices are: 360KB, 5.25 in., 1.2MB, 5.25 in., 720KB, 3.5 in., 1.44M, 3.5 in. (default), 2.88MB, 3.5 in., or None
Video	Set this field to the type of video display card installed in the system. The choices are: Monochrome; Color 40x25; VGA/EGA (default); or Color 80x25
Halt On	Set this warning feature for the type of errors that will cause the system to halt. The choices are: All Errors (default); No Errors; All, But Keyboard; All, But Diskette; or All, But Disk/Key

3. Press <ESC> to return to the Main Menu when you finish setting up the “Standard CMOS Setup”

BIOS Features Setup

BIOS Features Setup allows you to improve your system performance or set up system features according to your preference.

Run the BIOS Features Setup as follows:

1. Choose “BIOS FEATURES SETUP” from the Main Menu and a screen with a list of options will appear.

```
                    ROM PCI/ISA BIOS
                  BIOS FEATURES SETUP
                 AWARD SOFTWARE, INC.
Virus Warning                : Disabled  Video BIOS Shadow     : Enabled
CPU Internal Cache           : Enabled   C8000-CBFFF Shadow    : Disabled
External Cache               : Enabled   CC000-CFFFF Shadow    : Disabled
CPU L2 Cache ECC Checking    : Enabled   D0000-D3FFF Shadow    : Disabled
Quick Power on Self Test     : Enabled   D4000-D7FFF Shadow    : Disabled
Boot Sequence                : A,C,SCSI  D8000-DBFFF Shadow    : Disabled
Swap Floppy Drive            : Disabled  DC000-DFFFF Shadow    : Disabled
Boot Up Floppy Seek          : Disabled
Boot Up NumLock Status       : On
IDE HDD Block MODE           : Enabled
Gate A20 Option              : Fast
Memory Parity/ECC Check      : Disabled  ESC :Quit    ↑↓→ ←: Select Item
Typematic Rate Setting       : Disabled  F1  :Help       PU/PD/+/-: Modify
Typematic Rate (Chars/Sec)   : 6         F5  :Old Values(Shift)F2 : Color
Typematic Delay (Msec)       : 250       F6  :Load BIOS Defaults
Security Option              : Setup     F7  :Load Setup Defaults
PCI/VGA Palette Snoop        : Disabled
OS Select for DRAM > 64MB    : Non-OS/2
Report No FDD For WIN 95     : No
```

2. Use one of the arrow keys to move between options and modify the selected options by using PgUp/PgDn/+/- keys. An explanation of the <Fx> keys follows:

<F1>: “Help” gives options available for each item.

Shift <F2>: Change color.

<F5>: Get the previous values. These values are the values with which the user started in the current session.

<F6>: Load all options with the BIOS default values.

<F7>: Load all options with the Setup default values.

A short description of screen options follows:

Virus Warning	Enabled: Activates automatically when the system boots up causing a warning message to appear if there is anything attempting to access the boot sector or hard disk partition table. Disabled: No warning message will appear when there is something attempting to access the boot sector or hard disk partition table ***Note: Many diagnostic (or boot manager) programs which attempt to access the boot sector table can cause the above warning message. If you will be running such a program, we recommend that you disable the virus protection first.***
CPU Internal Cache	Choose Enabled (default) or Disabled. This option allows you to enable or disable the CPU's internal cache.
External Cache	Choose Enabled (default) or Disabled. This option allows you to enable or disable the external cache memory.
Quick Power On Self Test	Choose Enabled (default) or Disabled. This option allows you to speed up the Power-On Self-Test routine.

Boot Sequence	Default is “A, C, SCSI” This option determines which drive to look at first for an operating system.
Swap Floppy Drive	Choose Enabled or Disabled (default). This option swaps floppy drive assignments when it is enabled.
Boot Up Floppy Seek	Enabled (default): During POST, BIOS checks the track number of the floppy disk drive to see whether it is 40 or 80 tracks. Disabled: During POST, BIOS will not check the track number of the floppy disk drive.
Boot Up NumLock Status	Choose On (default) or Off. This option lets user activate the NumLock function at boot-up.
Gate A20 Option	Choose Normal or Fast (default). This option allows the RAM to access the memory above 1MB by using the fast gate A20 line.
Memory Parity /ECC Check	Choose Enabled or Disabled
Typematic Rate Setting	Choose Enabled or Disabled (default). Enable this option to adjust the keystroke repeat rate.
Typematic Rate (Chars/Sec)	Range between 6 (default) and 30 characters per second. This option controls the speed of repeating keystrokes.
Typematic Delay (Msec)	Choose 250 (default), 500, 750, and 1000. This option sets the time interval for displaying the first and

	the second characters.
Security Option	Choose System or Setup (default). This option prevents unauthorized system boot-up or use of BIOS Setup.
PCI/VGA palette Snoop	Choose Enabled or Disabled (default). It determines whether or not the MPEG ISA cards can work with PCI/VGA.
OS Select for DRAM > 64MB	Non-OS2 (default): For Non-OS/2 system. OS/2: For OS/2 system.
Report No FDD For WIN95	Yes: BIOS reports “NO FDD” to Win95. No (default): BIOS will not report “NO FDD” to Win95.
Video BIOS Shadow	Enabled (default): Map the VGA BIOS to system RAM. Disabled: Will not map the VGA BIOS to system RAM.
C8000-CBFFF to	These options are used to shadow
DC000-DFFF Shadow	other expansion card ROMs.

3. Press <ESC> and follow the screen instructions to save or disregard your settings.

Chipset Features Setup

Chipset Features Setup changes the values of the chipset registers. These registers control the system options.
Run the Chipset Features Setup as follows:

1. Choose “CHIPSET FEATURES SETUP” from the Main Menu and a screen with a list of options will appear.

```
                    ROM PCI/ISA BIOS
                 CHIPSET FEATURES SETUP
                  AWARD SOFTWARE, INC.
Bank 0/1 DRAM Timing      : SDRAM 10ns
Bank 2/3 DRAM Timing      : SDRAM 10ns
Bank 4/5 DRAM Timing      : SDRAM 10ns
SDRAM Cycle Length        : 3
DRAM Read Pipeline        : Disabled
Sustained 3T Write        : Enabled
Cache R/CPU W Pipeline    : Enabled
Cache Timing              : Fast
System BIOS Cacheable     : Enabled
Video BIOS Cacheable      : Enabled
Memory Hole               : Disabled
Init Display First        : PCI Slot
Frame Buffer Size         : 8M
AGP Aperture Size         : 64M
OnChip USB                : Enabled
Onchip USB 2              : Enabled
USB Keyboard Support      : Disabled
Onchip Sound              : Enabled
Onchip Modem              : Disabled

ESC: Quit   ↑ ↓ → ←: Select Item
F1 : Help        PU/PD/+/-: Modify
F5 : Old Values (Shift)F2 : Color
F6 : Load BIOS Defaults
F7 : Load Setup Defaults
```

2. Use one of the arrow keys to move between options and modify the selected options by using PgUp/PgDn/+/— keys.
A short description of screen options follows:

Bank 0/1 2/3 4/5 DRAM Timing

This item allows you to select the value in this field, depending on whether the board has paged DRAMs or EDO (extended data output) DRAMs. The Choice: EDO 50ns, EDO 60ns,Slow, Medium, Fast, Turbo.

SDRAM Cycle Length Time	You can select CAS latency time in HCLKs of 2/2 or 3/3. The system board designer should have set the values in this field, depending on the DRAM installed. Do not change the values in this field unless you change specifications of the installed DRAM or the installed CPU.
System BIOS Cacheable	Choose Enabled or Disabled (default). When Enabled, the access to the system BIOS ROM addressed at F0000H-FFFFFH is cached.
Video BIOS Cacheable	Choose Enabled or Disabled (default). When Enabled, the access to the VGA BIOS addressed is cached.
Memory Hole	Choose Enabled or Disabled (default). In order to improve performance, certain space in memory can be reserved for ISA cards. This memory must be mapped into the memory's space below 16MB.
Init Display First	This item allows you to decide to active whether PCI Slot or AGP first. The choice: PCI Slot, AGP.
AGP Aperture Size (MB)	Choose 4 , 8, 16, 32, 64 (default), 128, or 256 MB. Memory mapped and graphics data structures can reside in a Graphics Aperture. This area is like a linear buffer. BIOS will automatically report the starting address of this buffer to the O.S.

OnChip USB **OnChip USB 2**	This should be enabled if your system has a USB installed on the system board and you wish to use it. Even when so equipped, if you add a higher performance controller, you will need to disable this feature. The choice: Enabled, Disabled.
USB Keyboard Support	Enabled: Enables function when the USB keyboard is being used. Disabled: (default) When the AT keyboard is being used.
OnChip Sound	Enabled (default):Turn on AC97 chip Controller Disabled:Turn off AC97 chip controller or User can external add-on sound card
OnChip Modem	Enabled :Turn on MC99 feature Disabled(default):Disabled AC97 chip controller or User can external add-on modem

3. Press <ESC> and follow the screen instructions to save or disregard your settings.

Power Management Setup

Power Management Setup sets the system's power saving functions.

1. Choose "POWER MANAGEMENT SETUP" from the Main Menu and a screen with a list of options will appear.

```
                    ROM PCI/ISA BIOS(2A6LGSNC)
                      POWER MANAGEMENT SETUP
                       AWARD SOFTWARE, INC.
ACPI Function         :Disabled        Primary INTR           : ON
Power Management      :User Define     IRQ3  (COM2)           : Primary
PM Control by APM     :Yes             IRQ4  (COM1)           : Primary
Video Off Method      :V/H SYNC+Blank  IRQ5  (LPT2)           : Primary
Video Off After       :Suspend         IRQ6  (Floppy Disk)    : Primary
Modem Use IRQ         :3               IRQ7  (LPT 1)          : Primary
HDD Power Down        :Disabled        IRQ8  (RTC Alarm)      : Disabled
Doze Mode             :Disabled        IRQ9  (IRQ2 Redir)     : Secondary
Suspend Mode          :Disabled        IRQ10 (Reserved)       : Secondary
Soft-Off by PWRBTN    :Instant-Off     IRQ11 (Reserved)       : Secondary
PWON After PW-Fail    :Former-Sts      IRQ12 (RS/2 Mouse)     : Primary
            **PM Events**              IRQ13 (Coprocessor)    : Primary
VGA                   :OFF             IRQ14 (Hard Disk)      : Primary
LPT&COM               :LPT/COM         IRQ15 (Reserved)       : Disabled
HDD&FDD               :ON              ESC : Quit    ↑ ↓ → ←: Select Item
DMA/master            :OFF             F1 : Help       PU/PD/+/- : Modify
RTC Alarm  Resume     :Enabled         F5 : Old Values (Shift)F2 : Color
Date(of Month)        : 0              F6 : Load BIOS Defaults
Timer(hh:mm:ss)       : 0: 0: 0        F7 : Load Setup Defaults
Modem Ring Resume     :Disabled
```

2. Use one of the arrow keys to move between options and modify the selected options by using PgUp/PgDn/+/- keys.

A short description of screen options follows:

ACPI Function — Enabled:Turn on ACPI Function
Disabled(default):Turn off ACPI Function

Power Management — Choose Max. Saving, User Define (default), Disabled, or Min. Saving.

PM Control by APM — Choose Yes (default) or No. You need to choose Yes when the operating system has the APM functions,

otherwise choose No.

Video Off Method This determines the manner in which the monitor is blanked.

V/H SYNC+Blank	This selection will cause the system to turn off the vertical and horizontal synchronization ports and write blanks to the video buffer.
Blank Screen	This option only writes blanks to the video buffer.
DPMS	Select this option if your monitor supports the Display Power Management Signaling (DPMS) standard of the Video Electronics Standards to select video power management values.

Video Off After Choose NA, Suspend, Standby (default), or Doze.

MODEM Use IRQ This determines the IRQ in which the MODEM can use. The choices: 3, 4, 5, 7, 9, 10, 11, NA.

Soft-Off by PWR-BTTN Pressing the power button for more than 4 seconds forces the system to enter the Soft-Off state when the system has “hung.”.The choices: Delay 4 Sec, Instant-Off.

Doze Mode When enabled and after the set time of system inactivity, the CPU clock will run at slower speed while all other devices still operate at full speed.

Suspend Mode When enabled and after the set time of system inactivity, all devices except the CPU will be shut off.

HDD Power Down When enabled and after the set time of system inactivity, the hard disk drive will be powered down while all other devices remain active.

PM Events

PM events are I/O events whose occurrence can prevent the system from entering a power saving mode or can awaken the system from such a mode. In effect, the system remains alert for anything which occurs to a device which is configured as On, even when the system is in a power down mode.

VGA When Enabled, your can set the LAN awakens the system.

LPT & COM When On of LPT & COM, any activity from one of the listed system peripheral devices or IRQs wakes up the system.

HDD & FDD When On of HDD & FDD, any activity from one of the listed system peripheral devices wakes up the system.

DMA / master When you are On of DMA / ISA Master, any activity from one of the list system peripheral devices wakes up the system.

Modem Ring Resume An input signal on the serial Ring Indicator (RI) line (in other words, an incoming call on the modem) awakens the system from a soft off state.

RTC Alarm Function When Enabled, your can set the date and time at which the RTC (real-time clock) alarm awakens the system from Suspend mode.

Primary INTR When set to On, any event occurring at will awaken a system which has been

powered down.

The following is a list of IRQ's, **I**nterrupt **R**e**Q**uests, which can be exempted much as the COM ports and LPT ports above can. When an I/O device wants to gain the attention of the operating system, it signals this by causing an IRQ to occur. When the operating system is ready to respond to the request, it interrupts itself and performs the service.

When set On, activity will neither prevent the system from going into a power management mode nor awaken it.

IRQ3 (COM 2)

IRQ4 (COM 1)

IRQ5 (LPT 2)

IRQ6 (Floppy Disk)

IRQ7 (LPT 1)

IRQ8 (RTC Alarm)

IRQ9 (IRQ2 Redir)

IRQ10 (Reserved)

IRQ11 (Reserved)

IRQ12 (PS / 2 Mouse)

IRQ13 (Coprocessor)

IRQ14 (Hard Disk)

IRQ15 (Reserved).

Note: These functions can only be activated when the power management option is Enabled

3. Press <ESC> and follow the screen instructions to save or disregard your settings.

PnP/PCI Configuration Setup

PnP/PCI Configuration Setup configures the PCI bus slots.

Run the Chipset Features Setup as follows:

1. Choose "PnP/PCI CONFIGURATION SETUP" from the Main Menu and a screen with a list of options will appear.

```
                    ROM PCI/ISA BIOS
                 PNP/PCI CONFIGURATION
                  AWARD SOFTWARE, INC.

PNP OS Installed        : No                CPU to PCI Write Buffer : Enabled
Resources Controlled By : Auto              PCI Dynamic Bursting    : Enabled
Reset Configuration Data: Disabled          PCI Master O WS Write   : Enabled
                                            PCI Delay Transaction   : Enabled
IRQ-3  assigned to      : PCI/ISA PnP       PCI#2 Access #1 Retry   : Disabled
IRQ-4  assigned to      : PCI/ISA PnP       AGP Master 1 WS Write   : Enabled
IRQ-5 assigned to : PCI/ISA PnP             AGP Master 1 WS Read    : Disabled
IRQ-7 assigned to : PCI/ISA PnP
IRQ-9 assigned to : PCI/ISA PnP             PCI IRQ Actived By      : Level
IRQ-10      assigned to : PCI/ISA PnP       Assign IRQ For USB      : Enabled
IRQ-11      assigned to : PCI/ISA PnP       Assign IRQ For VGA      : Enabled
IRQ-12      assigned to : PCI/ISA PnP
IRQ-14      assigned to : PCI/ISA PnP
IRQ-15      assigned to : PCI/ISA PnP
DMA-0       assigned to : PCI/ISA PnP
DMA-1 assigned to : PCI/ISA PnP             ESC : Quit     ↑ ↓→ ←: Select Item
DMA-3 assigned to : PCI/ISA PnP             F1  : Help       PU/PD/+/- : Modify
DMA-5 assigned to : PCI/ISA PnP             F5  : Old Values (Shift)F2 : Color
DMA-6 assigned to : PCI/ISA PnP             F6  : Load BIOS Defaults
DMA-7  assigned to      : PCI/ISA PnP       F7  : Load Setup Defaults
```

2. Use one of the arrow keys to move between options and modify the selected options by using PgUp/PgDn/+/- keys.

A short description of screen options follows:

PNP OS Installed Yes: OS supports Plug and Play function. No (default): OS doesn't support Plug and Play function.

Note: BIOS will automatically disable all PnP resources except the boot device card when you select Yes on Non-PnP OS..

Resources Controlled By	Choose Manual (default) or Auto. The BIOS checks the IRQ/DMA channel number on the ISA and PCI card manually if you choose Manual and the IRQ/DMA channel number will be checked automatically if you choose Auto.
Reset Configuration Data	Choose Enabled or Disabled (default). Disabled retains PnP configuration data in BIOS and Enabled resets the PnP configuration data in the BIOS.
IRQ-x assigned to **DMA-x assigned to**	Legacy ISA: Manually assigns IRQ/DMA to device. PCI/ISA PnP: BIOS assigns IRQ/DMA to device automatically.
Assign IRQ for USB	Choose Enabled (default) or Disabled. Enabled: Add one IRQ to USB controller. Disabled: Remove IRQ from USB controller. The system will have extra IRQ for other devices but the USB controller will still not be disabled (only IRQ was removed.)
Assign IRQ for VGA	Choose Enabled (default) or Disabled. Enabled: Add one IRQ to VGA controller. Disabled: Remove IRQ from VGA controller. The system will have extra IRQ for other devices but the VGA controller will still not be disabled (only IRQ will be removed.)

3. Press <ESC> and follow the screen instructions to save or disregard your settings.

Load Setup Defaults

Load Setup Defaults option loads the default system values to the system configuration fields. If the CMOS is corrupted the defaults are loaded automatically. Choose this option and the following message will appear:

```
"Load Setup Defaults (Y/N)? N"
```

To use the Setup defaults, change the prompt to "Y" and press <Enter>.

CPU SPEED SETTING

```
                    ROM PCI/ISA BIOS
                 PNP/PCI CONFIGURATION
                 AWARD SOFTWARE, INC.
Current cpu Temp.         :33 C / 91 F
Current System Temp.      :26 C / 78 F
Current CPUFAN1 Speed     : 3810 RPM
Current CPUFAN2 Speed     :    0 RPM
Vcore:  1.96V     2.5V    :  2.46 V
 3.3V:  3.36V       5V    :  5.02 V
  12V: 12.00V

                          ESC : Quit     ↑↓→ ←: Select Item
                          F1  : Help       PU/PD/+/- : Modify
                          F5  : Old Values (Shift)F2 : Color
                          F6  : Load BIOS Defaults
                          F7  : Load Setup Defaults
```

3. Press <ESC> and follow the screen instructions to save or disregard your settings.

Integrated Peripherals

Integrated Peripherals option changes the values of the chipset registers. These registers control system options in the computer.

1. Choose "INTEGRATED PERIPHERALS" from the Main Menu and a screen with a list of options will appear.

```
                    ROM PCI/ISA BIOS
                INTEGRATED PERIPHERALS
                 AWARD SOFTWARE, INC.
Onchip IDE Channe10        : Enabled     Onboard Parallel Mode  : ECP/EPP
Onchip IDE Channe11        : Enabled     ECP Mode Use DMA       : 3
IDE Prefetch Mode          : Enabled     Parallel Port EPP Type : EPP1.7
IDE HDD Block Mode         : Enabled     Onboard Legacy Audio   : Enabled
Primary Master PIO         : Auto        Sound Blaster          : Enabled
Secondary Master PIO       : Auto        SB I/O Base Address    : 220H
Secondary Slave PIO          : Auto      SB IRQ Select          : IRQ 5
Primary Master UDMA          : Auto      SB DMA Select          : DMA 1
Primary Slave UDMA           : Auto      MPU-401                : Disabled
Secondary Master UDMA      : Auto        MPU-401 I/O Address    : 330-333H
Secondary Slave UDMA       : Auto        FM Port (388-38BH)     : Disabled
                                         Game Port (200-207H)   : Enabled
Onboard FDC Controller     : Enabled
Onboard Serial Port 1      : 3F8/IRQ4
Onboard Serial Port 2        :
2F8/IRQ3
UART 2 Mode                : HPSIR       ESC : Quit    ↑↓→ ←: Select Item
IR Function Duplex         : Half        F1   : Help      PU/PD/+/- : Modify
TX,RX, inverting enable    : No,No       F5   : Old Values (Shift)F2: Color
Onboard Parallel Port      : 378/IRQ7    F6   : Load BIOS Defaults
                                         F7   : Load Setup Defaults
```

2. Use one of the arrow keys to move between options and modify the selected options by using PgUp/PgDn/+/ – keys.

A short description of screen options is as follows:

On-Chip IDE Channel 0/1 Enabled: (default)Turn on the onboard IDE function.
Disabled: Turn off the onboard IDE function.

IDE Prefetch Mod The onboard IDE drive interfaces supports IDE prefetching, for faster drive accesses. If you install a primary and/or secondary add-in IDE interface, set this field to Disabled if the interface does not support prefetching. The

choice: Enabled, Disabled.

IDE HDD Block Mode

Choose Enabled (default) or Disabled. If your hard disk size is larger than 540MB, choose Enabled, and, if you are using the IDE HDD Auto Detection option, the BIOS will choose this option automatically.
Note: Some older model HDDs don't provide this feature.

Primary Master/Slave PIO
Secondary Master/Slave PIO

Choose Auto (default) or Mode 0~4. The BIOS will detect the HDD Mode type automatically when you choose Auto. You need to set to a lower mode than Auto when your hard disk becomes unstable.

Primary Master/Slave UDMA
Secondary Master/Slave UDMA

Ultra DMA/33 implementation is possible only if your IDE hard drive supports it and the operating environment includes a DMA driver (Windows 95 OSR2 or a third-party IDE bus master driver). If your hard drive and your system software both support Ultra DMA/33, select Auto to enable BIOS support. The Choice: Auto, Mode 0, Mode 1, Mode 2.

Onboard FDC Controller

Choose Enabled (default) or Disabled. Choose Disabled when you use an ISA card with FDD function, or , choose Enabled to use the onboard FDD connector.

Onboard Serial

Choose Auto (default), 3F8/IRQ4,

Port 1	2F8/IRQ3, 3E8/IRQ4, 2E8/IRQ3, or Disabled. Do no set port 1 & 2 to the same value, except when setting at Disabled.
Onboard Serial Port 2	Choose Auto (default), 3F8/IRQ4 , 2F8/IRQ3, 3E8/IRQ4, 2E8/IRQ3, or Disabled.
UART 2 Mode	Choose Standard (default), HPSIR, or ASKIR.
IR Function Duplex	Choose Half or Full
Onboard Parallel Port	Choose the printer I/O address: 378H/IRQ7 (default), 3BCH/IRQ7, 278H/IRQ5, Disabled
Onboard Parallel Mode	Choose Normal (default), ECP/EPP EPP, or ECP mode. The mode depends on the external device connected to this port.
ECP Mode Use DMA	Choose DMA3 (default) or DMA1. Most sound cards use DMA1. Check with your sound card configuration to make sure that there is no conflict with this function. ***: This option will not be displayed unless the EPP/ECP function is selected..***

Parallel Port EPP Type	Choose EPP1.7 (default) or EPP1.9. EPP1.9 supports hardware handshake. This setting is dependent upon your EPP device. ***Note: The above 2 options will not be displayed unless the EPP/ECP function is selected.***

3. Press <ESC> and follow the screen instructions to save or disregard your settings.

Supervisor/User Password

These two options allow you to set your system passwords. Normally, the supervisor has a higher ability to change the CMOS setup option than the user. The way to set up the passwords for both Supervisor and User are as follows:

1. Choose "Change Password" in the Main Menu and press <Enter>. The following message appears:

   `"Enter Password:"`

2. The first time you run this option, enter your password up to 8 characters and press <Enter>. The screen does not display the entered characters.

3. After you enter the password, the following message appears prompting you to confirm the password:

   `"Confirm Password:"`

4. Enter the same password "exactly" as you just typed again to confirm the password and press <Enter>.

5. Move the cursor to Save & Exit Setup to save the password.

6. If you need to delete the password you entered before, choose the Supervisor Password and press <Enter>. It will delete the password that you had before.

7. Move the cursor to Save & Exit Setup to save the option you did, otherwise the old password will still be there the next time you turn your machine on.

8. Press <ESC> to exit to the Main Menu.

Note: If you forget or lose the password, the only way to access the system is to clear the CMOS RAM by setting JBAT1. All setup information will be lost and you need to run the BIOS setup program again.

IDE HDD Auto Detection

IDE HDD Auto Detection detects the parameters of an IDE hard disk drive and automatically enters them to the Standard CMOS Setup screen.

The screen will ask you to select a specific hard disk for Primary Master after you select this option. If you accept a hard disk detected by the BIOS, you can enter “Y” to confirm and then press <Enter> to check next hard disk. This function allows you to check four hard disks and you may press the <ESC> after the <Enter> to skip this function and go back to the Main Menu.

Save & Exit Setup

Save & Exit Setup allows you to save all modifications you have specified into the CMOS memory. Highlight this option on the Main Menu and the following message appears:

SAVE to CMOS and EXIT (Y/N)? Y

Press <Enter> key to save the configuration changes.

Exit Without Saving

Exit Without Saving allows you to exit the Setup utility without saving the modifications that you have specified. Highlight this option on the Main Menu and the following message appears:
Quit Without Saving (Y/N)? N

You may change the prompt to “Y” and press the <Enter> key to leave this option.